Millennium
QUALITY BATHROOMWARE
- SINCE 1997 AUSTRALIA -

CIOSO SQ DIVERTER MIXER GUN METAL SQ159GM

- Available in 5 finishes
- PVD finish
- Ceramic disc diverter
- 15 year conditional warranty
- Maximum operating pressure 500kpa
- Minimum operating pressure 150kpa
- Maximum water temperature 80 degrees
- Must be installed by a licensed plumber

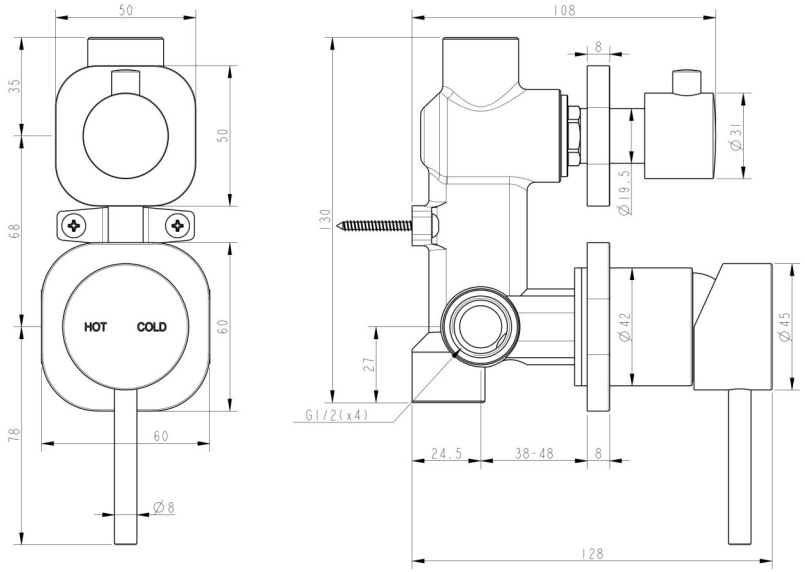

All specifications are correct at time of print. Changes may be made without notification. Sizes & finish may differ from website image. Use product for all installation rough ins, as tech drawing is a guide and may differ slightly.

millenniumtapware.com.au