AKEMI SQ COMBINATION SHOWER 300MM MODERN BRASS SQ354BB-30

- Available in 6 finishes
- PVD finish
- 300mm overhead rose
- Dual fixing for added stability
- Brass & ABS construction
- 15 year replacement warranty
- 5 year finish warranty
- 1 year hose warranty
- WELS rating 3 Star 9 l/min
- 3 function handpiece
- Max. operating pressure 500 kpa
- Min. operating pressure 150 kpa
- Maximum water temperature 80 degrees
- Must be installed by a licensed plumber

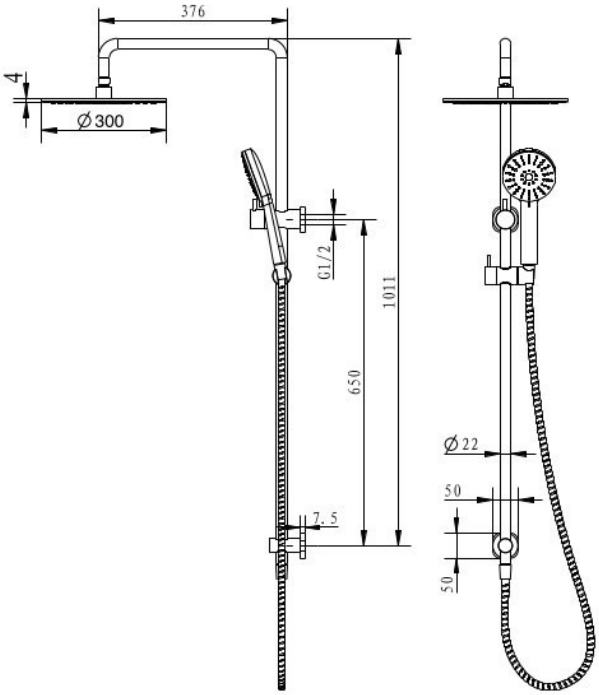

All specifications are correct at time of print. Changes may be made without notification. Sizes & finish may differ from website image. Use product for all installation rough ins, as tech drawing is a guide and may differ slightly.